Round 2 - Friday, February 18, 2022

SHOTLINK

LECOM Suncoast Classic

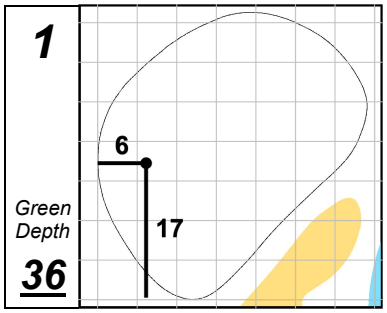

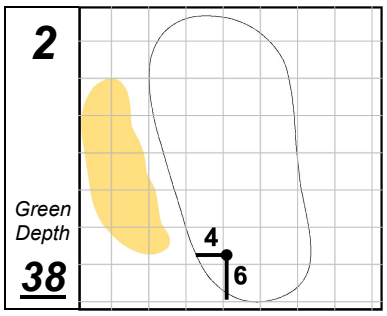

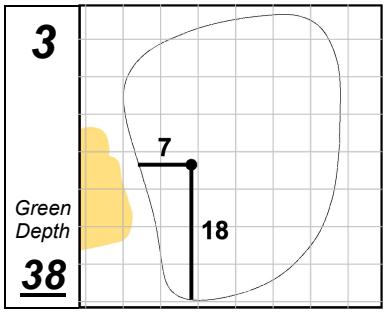

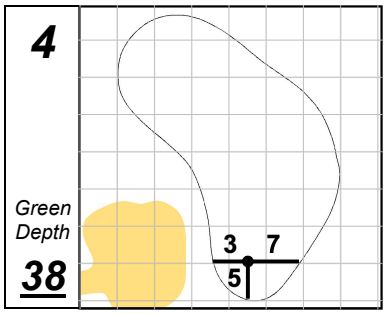

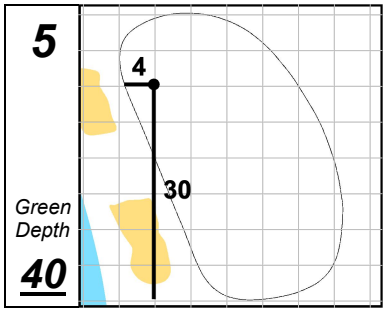

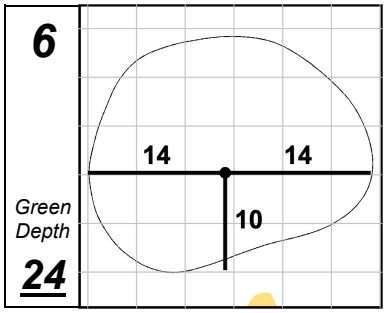

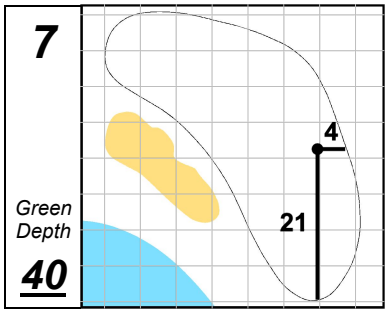

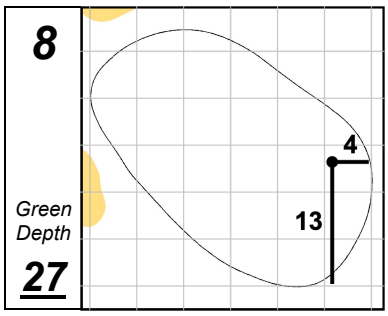

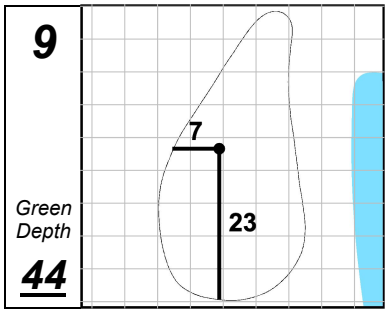

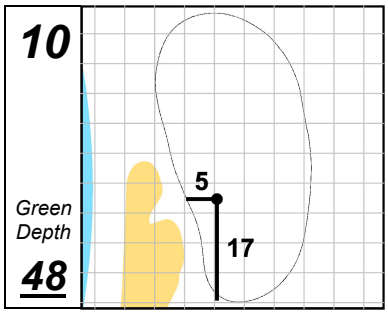

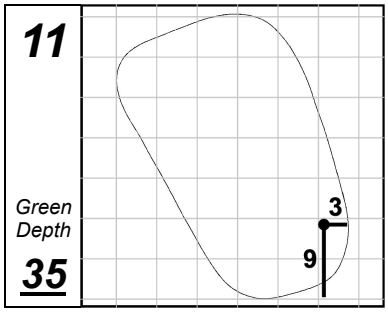

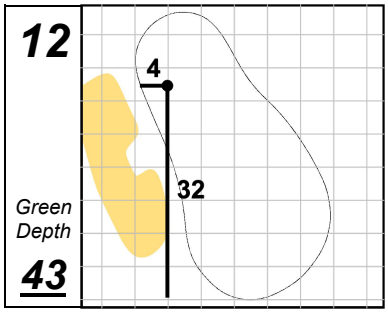

Lakewood National GC Commander

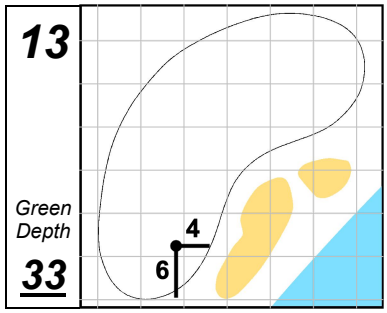

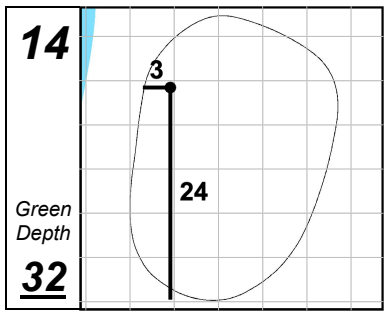

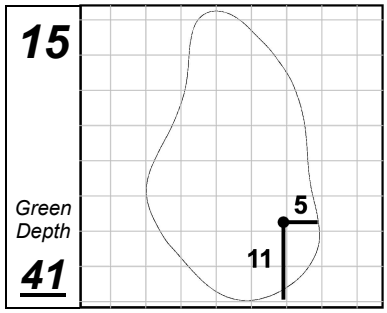

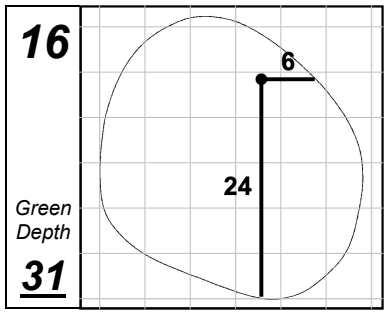

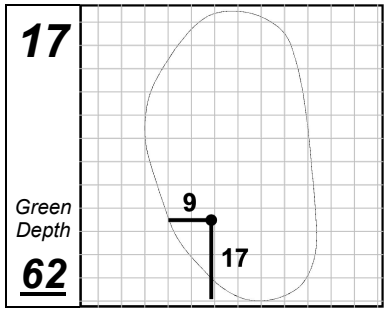

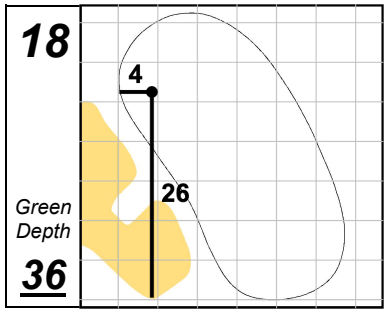

Each side of a complete square on the green represents 5 YARDS.

Thursday, February 17, 2022 7:12:08 PM